BROAN® Elite

Under-Cabinet

ALTA

The sculpted lines of Alta™ bring an exciting, new choice to typical range hood shapes. Infrared controls and perimeter aspiration allow you to imagine new design possibilities while you experience the ultimate in capture efficiency.

SIZE	STAINLESS	GREASE FILTERS (replacement)	NON-DUCTED FILTERS
30 in.	ALT430SS	HPFA52 (Type "H2")	HPF52 (Type "Xh2")
36 in.	ALT436SS	HPFA52 (Type "H2")	HPF52 (Type "Xh2")

HVI PERFORMANCE

Duct Orientation	Size	Damper	Sones			CFM			
			Normal	Medium*	High	Normal	Medium*	High 0.25 in. w.g.	High 0.1 in. w.g.
Vertical - Rectangular	3¼ in. x 10 in.	Included	<0.3	3.0	7.0	110	270	340	380
Horizontal - Rectangular	3¼ in. x 10 in.	Included	<0.3	3.0	7.0	110	280	380	430
Vertical - Rectangular	3¼ in. x 14 in.	Included	<0.3	3.0	7.0	120	280	370	420
Horizontal - Rectangular	3¼ in. x 14 in.	Included	<0.3	3.0	7.0	110	290	430	480
Round - Vertical	7 in.	Sold Separately	<0.3	3.0	7.0	120	270	350	390

FEATURES

Control type	3-Speed Infrared
Delay off	yes
Filter Clean Reminder	yes
Heat Sentry™	yes
ADA Capable	yes
Lighting	3-level LED (included)
Grease Filters	Peripheral
Installation Hardware	EZ1 Bracket
ENERGY STAR®	no
Recirculation	Non-ducted filters sold separately

AC INPUT

120 V, 60 Hz - 1.9 AMPS

OPTIONAL ACCESSORIES

7-in. Round Damper	BP87Q
ADA Wiring Kit	HAWRK3
Make-up Air Damper	MD6TU, MD8TU, or MD10TU
Remote Control	HCR3

MOUNTING HEIGHT

24 in. to 30 in. from cooktop to bottom of hood

LIMITED WARRANTY

1-year
3-year (LED modules only)
(See installation manual for full warranty text.)

FOR INDOOR USE ONLY

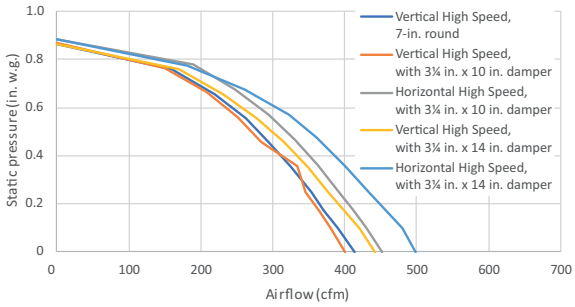

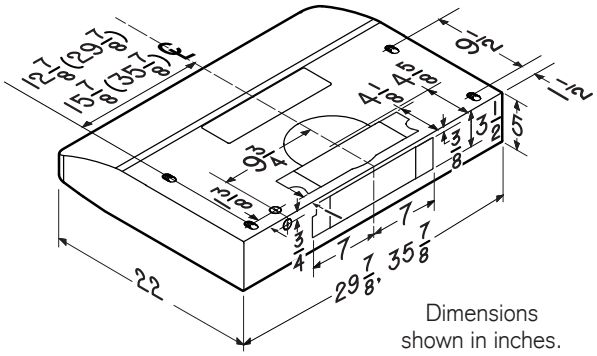

Dimensions shown in inches.

HVI-2100 CERTIFIED RATINGS comply with new testing technologies and procedures prescribed by the Home Ventilating Institute, for off-the-shelf products, as they are available to consumers. Product performance is rated at 0.1 and 0.25 in. static pressure at high speed based on tests conducted in an HVI-approved state-of-the-art test laboratory. Sones are a measure of humanly-perceived loudness, based on laboratory measurements.

* Where noted performance rating is not HVI certified but was established in accordance with HVI Standardized test procedure.

SPECIFICATION SHEET
ALT4 SERIES

Broan-NuTone LLC | 926 West State Street, Hartford, Wisconsin, USA 53027 | broan-nutone.com | 800-558-1711