Under-Cabinet

SPIRE

Broan brings you Spire, an exciting new shape in a pro-style hood. The new design incorporates modern features like the quiet Captur™ system and LED lighting.

SIZE	STAINLESS	GREASE FILTERS (replacement)	NON-DUCTED FILTERS
30 in.	BPDP130SS	HPFA424 (Type "B5")	HPF24 (Type "Xb")
36 in.	BPDP136SS	HPFA430 (Type "C5")	HPF30 (Type "Xc")
42 in.	BPDP142SS	HPFA436 (Type "D5")	HPF36 (Type "Xd")
48 in.	BPDP148SS	HPFA442 (Type "E5")	HPF42 (Type "Xe")

HVI PERFORMANCE

Duct Orientation	Size	Damper	Sones		CFM		
			Normal	High	Normal	High 0.25 in. w.g.	High 0.1 in. w.g.
Vertical - Rectangular	3¼ in. x 10 in.	Included	0.4	6.0	140	310	360
Horizontal - Rectangular	3¼ in. x 10 in.	Included	0.4	5.5	150	340	400
Round - Vertical	7 in.	Sold Separately	0.4	5.5	140	320	370

FEATURES

Max. Blower CFM*	450
Control type	2-speed Deluxe Rocker
Delay off	no
Filter Clean Reminder	no
Heat Sentry™	no
ADA Capable	yes
Lighting	1-level LED (included)
Grease Filters	Hybrid Baffle (Qty. 2)
Installation Hardware	EZ1 brackets
ENERGY STAR®	no
Recirculation	Non-ducted filters sold separately

AC INPUT

120 V, 60 Hz - 1.4 AMPS

OPTIONAL ACCESSORIES

7-in. Round Damper	BP87Q
Make-up Air Dampers	MD6TU, MD8TU and MD10TU

MOUNTING HEIGHT

18 in. to 30 in. from cooktop to bottom of hood

LIMITED WARRANTY

1-year
3-year (LED modules only)
(See installation manual for full warranty text.)

FOR INDOOR USE ONLY

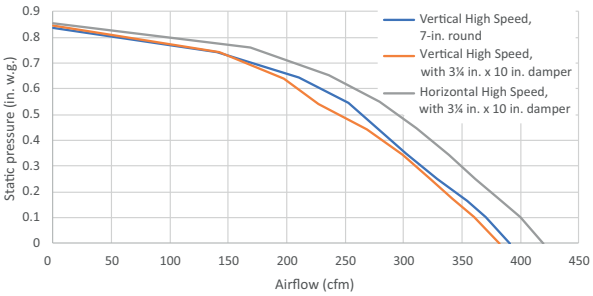

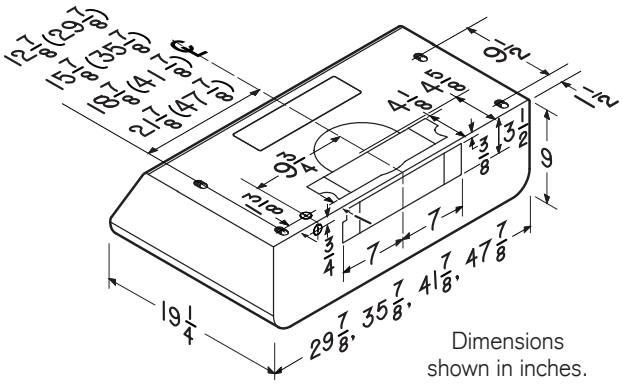

HVI-2100 CERTIFIED RATINGS comply with new testing technologies and procedures prescribed by the Home Ventilating Institute, for off-the-shelf products, as they are available to consumers. Product performance is rated at 0.1 and 0.25 in. static pressure at high speed based on tests conducted in an HVI-approved state-of-the-art test laboratory. Sones are a measure of humanly-perceived loudness, based on laboratory measurements.

* Max. blower CFM indicates the performance of the hood blower in open air.

SPECIFICATION SHEET

SPIRE - BPDP1 SERIES